General Information

Parcel Number
35-05-14-100-164.800-005

Local Parcel Number

Tax ID:

Routing Number
232-7

Property Class 510
1 Family Dwell - Platted Lot

Year: 2026

Location Information

County
Huntington

Township
HUNTINGTON TOWNSHIP

District 005 (Local 003)
HUNTINGTON CITY

School Corp 3625
HUNTINGTON COUNTY COMMUN

Neighborhood 3505535-005
FAIRVIEW PARK

Section/Plat

Location Address (1)
2145 SABINE ST
HUNTINGTON, IN 46750

Zoning

Subdivision

Lot

Market Model
N/A

Characteristics

Topography	Flood Hazard
Level	☐
Public Utilities	**ERA**
All	☐
Streets or Roads	**TIF**
Paved	☑

Neighborhood Life Cycle Stage
Static

Printed Thursday, April 23, 2026
Review Group 2024

Ownership

Kenneth L & Melanie R Meyers
10855 N 200 W
Huntington, IN 46750

Legal

MCFARLANDS ADD E PT LOT 1 & E PT LOT 2

Transfer of Ownership

Date	Owner	Doc ID	Code	Book/Page	Adj Sale Price	V/I
06/23/2000	Kenneth L & Melanie R		WD	/	$51,900	I
07/31/1992	JOHN R. DENMAN		WD	/		I
11/06/1981	JOHN R. & RITA M DE		WD	/		I
01/01/1900	JOHN WELTER & IDA		WD	/		I

Notes

9/28/2023 CY24: CYCLICAL REASSESSMENT 2024
NO CHG

6/9/2010 ai: 232-7

1/1/1900 CY16: CYCLICAL REASSESSMENT 2016

1/1/1900 CY20: CYCLICAL REASSESSMENT 2020

1/1/1900 REAS: REASSESSMENT 2012
CHG EFF YR

Res

Valuation Records

Assessment Year	2026	2025	2024	2023	2022
Reason For Change	AA	AA	GenReval	GenReval	GenReval
As Of Date	04/14/2026	01/01/2025	01/01/2024	01/01/2023	01/01/2022
Valuation Method	Indiana Cost Mod	Indiana Cost Mod	Indiana Cost Mod	Indiana Cost Mod	Indiana Cost Mod
Equalization Factor	1.0000	1.0000	1.0000	1.0000	1.0000
Notice Required	☐	☐	☐	☐	☐
Land	**$8,300**	**$8,300**	**$8,300**	**$8,300**	**$8,300**
Land Res (1)	$8,300	$8,300	$8,300	$8,300	$8,300
Land Non Res (2)	$0	$0	$0	$0	$0
Land Non Res (3)	$0	$0	$0	$0	$0
Improvement	**$101,100**	**$97,200**	**$74,300**	**$65,500**	**$60,100**
Imp Res (1)	$101,100	$97,200	$74,300	$65,500	$60,100
Imp Non Res (2)	$0	$0	$0	$0	$0
Imp Non Res (3)	$0	$0	$0	$0	$0
Total	**$109,400**	**$105,500**	**$82,600**	**$73,800**	**$68,400**
Total Res (1)	$109,400	$105,500	$82,600	$73,800	$68,400
Total Non Res (2)	$0	$0	$0	$0	$0
Total Non Res (3)	$0	$0	$0	$0	$0

Land Data (Standard Depth: Res 132', CI 132' Base Lot: Res 60' X 132', CI 60' X 132')

Land Type	Pricing Method	Soil ID	Act Front.	Size	Factor	Rate	Adj. Rate	Ext. Value	Infl. %	Market Factor	Cap 1	Cap 2	Cap 3	Value
F	F		62	62x120	0.96	$140	$134	$8,308	0%	1.0000	100.00	0.00	0.00	$8,310

Data Source N/A **Collector** 08/09/1994 AP **Appraiser** 03/01/1995 MKP

Land Computations

Calculated Acreage	0.17
Actual Frontage	62
Developer Discount	☐
Parcel Acreage	0.00
81 Legal Drain NV	0.00
82 Public Roads NV	0.00
83 UT Towers NV	0.00
84 Solar Energy Land	0.00
9 Homesite	0.00
91/92 Acres	0.00
Total Acres Farmland	0.00
Farmland Value	$0
Measured Acreage	0.00
Avg Farmland Value/Acre	0.0
Value of Farmland	$0
Classified Total	$0
Farm / Classifed Value	$0
Homesite(s) Value	$0
91/92 Value	$0
Supp. Page Land Value	
CAP 1 Value	$8,300
CAP 2 Value	$0
CAP 3 Value	$0
Total Value	**$8,300**

General Information

Occupancy	Single-Family
Description	Single-Family R 01
Story Height	1 1/2
Style	N/A
Finished Area	1292 sqft
Make	

Floor Finish

- ☐ Earth
- ☐ Tile
- ☐ Slab
- ☐ Carpet
- ☑ Sub & Joist
- ☑ Unfinished
- ☑ Wood
- ☐ Other
- ☐ Parquet

Wall Finish

- ☑ Plaster/Drywall
- ☑ Unfinished
- ☐ Paneling
- ☐ Other
- ☐ Fiberboard

Roofing

- ☐ Built-Up
- ☐ Metal
- ☑ Asphalt
- ☐ Slate
- ☐ Tile
- ☐ Wood Shingle
- ☐ Other

Plumbing

	#	TF
Full Bath	1	3
Half Bath	0	0
Kitchen Sinks	1	1
Water Heaters	1	1
Add Fixtures	0	0
Total	3	5

Accommodations

Bedrooms	3
Living Rooms	0
Dining Rooms	0
Family Rooms	0
Total Rooms	6

Heat Type

Central Warm Air

Exterior Features

Description	Area	Value
Porch, Enclosed Frame	66	$8,200
Patio, Concrete	135	$1,000
Patio, Concrete	168	$1,400
Canopy, Shed Type	168	$3,000

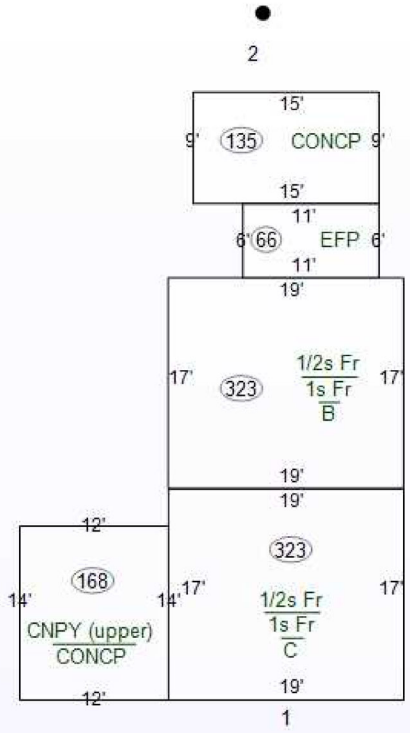

Specialty Plumbing

Description	Count	Value

Cost Ladder

Floor	Constr	Base	Finish	Value	Totals
1	1Fr	646	646	$94,100	
2					
3					
4					
1/4					
1/2	1Fr	646	646	$49,400	
3/4					
Attic					
Bsmt		323	0	$30,000	
Crawl		323	0	$4,100	
Slab					
			Total Base		$177,600
Adjustments			**1 Row Type Adj. x 1.00**		$177,600
Unfin Int (-)					$0
Ex Liv Units (+)					$0
Rec Room (+)					$0
Loft (+)					$0
Fireplace (+)					$0
No Heating (-)					$0
A/C (+)					$0
No Elec (-)					$0
Plumbing (+ / -)			5 – 5 = 0 x $0		$0
Spec Plumb (+)					$0
Elevator (+)					$0
				Sub-Total, One Unit	$177,600
				Sub-Total, 1 Units	
Exterior Features (+)				$13,600	$191,200
Garages (+) 0 sqft				$0	$191,200
			Quality and Design Factor (Grade)		0.85
				Location Multiplier	0.96
				Replacement Cost	$156,019

Summary of Improvements

Description	Story Height	Constr Type	Grade	Year Built	Eff Year	Eff Age	Co nd	Base Rate	LCM	Adj Rate	Size	RCN	Norm Dep	Remain. Value	Abn Obs	PC	Nbhd	Mrkt	Cap 1	Cap 2	Cap 3	Improv Value
1: Single-Family R 01	1 1/2	Wood Fr	D+1	1900	1929	97	A		0.96		1,615 sqft	$156,019	50%	$78,010	0%	100%	1.200	1.000	100.00	0.00	0.00	$93,600
2: Detached Garage R 01	1	Wood Fr	D	1900	1900	126	A	$69.34	0.96	$53.25	14'x20'	$14,911	50%	$7,460	0%	100%	1.000	1.000	100.00	0.00	0.00	$7,500