Expanding your Horizon...



Metzger
Property Services, LLC

Farm Sales • Real Estate • Auctions • Appraisals

260-982-0238

www.MetzgerAuction.com

Charming 2-Bedroom, 2-Bath Retreat on a Full Acre!



Enjoy the space, privacy, and peaceful setting this well-maintained 2-bedroom, 2-bath home has to offer! Situated on a full acre in a desirable rural setting, this property combines comfortable living with plenty of outdoor space and practical amenities.

An inviting layout provides a comfortable foundation for making the space your own. The main level features a convenient bedroom suite, making everyday living easy and accessible. The home also offers a partial basement for additional storage or flexible use.

Step outside and enjoy the landscaped grounds, open back deck, and gazebo—perfect for relaxing, entertaining, or simply taking in the surrounding countryside. A detached 2-car garage provides excellent parking and storage, while a whole-house generator offers valuable peace of mind.

Numerous improvements have been completed within the last couple of years, adding to the home's appeal and making it an excellent opportunity for its next owner.



<u>Additional features include:</u>
Partial basement
Whole house generator
Back deck
Gazebo
Garden Shed for additional storage

This property offers a wonderful combination of acreage, recent improvements, and desirable outdoor amenities, making it a great opportunity for those seeking comfort, privacy, and versatility in a peaceful rural setting!

Open House: Monday, October 26th 5:30-6 pm

www.BidMetzger.com

Metzger Property Services, LLC AC31300015
Real Estate • Auctions • Appraisals

REAL ESTATE AUCTION TERMS

Charming 2-bed, 2 bath Retreat on a Full Acre!

This property will be offered via Live & Online Auction on Sat., Oct. 31, 2026 - Bidding begins closing out at 10 am! Your bid constitutes a legal offer to purchase, and the final bid shall constitute a binding contract between the Buyer and Sellers. The seller has the right to accept or reject any bids at the auction & the auctioneer will settle any disputes as to bids and their decision will be final. The acreages and square footage amounts listed in this brochure and all marketing material are estimates taken from county records, FSA records and/or aerial photos. The sellers reserve the right to determine the need for, and type of survey provided. If completed, the cost of the survey will be shared 50/50 by the Seller and the Buyer.

A 4% buyer's premium will be added to the winning invoice. An earnest money deposit of $5,000 will be due within 24 hours of the auction with the balance due at closing. Said funds will be held in our Escrow account and will come off your balance due at closing. YOUR BIDDING IS NOT CONTINGENT UPON FINANCING. Buyers agree to sign the purchase agreement within 24 hours of the auction ending and submit their earnest money to Metzger Property Services within the 24-hour time period via cash, check or wire transfer. Buyer(s) agrees to pay an additional $25 wire transfer fee if wiring said funds. Buyers who fail to do so will be in breach of contract and are subject to damages &/or specific performance.

The Sellers will provide a Warranty Deed & an Owner's Title Insurance Policy at closing. The closing(s) shall be on or before December 4, 2026. Possession will be at closing. Taxes will be prorated to the day of closing. Real estate taxes for the entirety in '25 due in '26 were approximately $1,332.20. Metzger Property Services LLC, Chad Metzger, and their representatives, are exclusive agents of the Sellers. The auction company reserves the right to bid on behalf of the seller for the seller's reserve/minimum bid requirement. All statements made on auction day take precedence over printed materials. The property is being sold "AS IS, WHERE IS" with no warranties expressed or otherwise implied. All decisions made by the auctioneer are final. Real Estate Brokers must register clients 24 hours in advance of the auction and be present at any showings, and the auction if held live, your client attends. The Client Registration form is available on the bidding website.

Live Auction: Saturday, October 31, 2026 • Bidding begins closing out at 10AM

Open House: Monday, October 26 from 5:30-6pm

Auction Manager: John Burnau, call/text 574.376.5340

www.BidMetzger.com

Residential Agent Full Detail Report

Schedule a Showing

Class RESIDENTIAL
Property Type Site-Built Home **Status** Active **CDOM** 0 **DOM** 0 **Auction** Yes

MLS # 202641241 **2464 E 225 S Road** **Warsaw** **IN** 46580 **LP** $0



Area Kosciusko County **Parcel ID** 43-11-26-400-290.000-03 **Typ** Site-Built Home **Waterfront** No
Sub None **Cross Street** **Bedrm** 2 **F Baths** 2 **H Baths** 0
Township Wayne **Style** One Story **REO** No **Short Sale** No
School District Warsaw Community **Ele** Jefferson
Intermediate **JrH** Lakeview **SrH** Warsaw
Legal Description 003-126-003 PT NE NW 26-32-6 1.00A
Directions to Property Head east on Pierceton Rd, take second exit on roundabout to continue on Pierceton Rd, turn right on 275 E, turn right on 225 S, property will be on the right side

Inside City Limits **City Zoning** **County Zoning** **Zoning Description**

Remarks Enjoy the space, privacy, and peaceful setting this well-maintained 2-bedroom, 2-bath home Selling via Live & Online Auction on Oct. 31st at 10 pm has to offer! Situated on a full acre in a desirable rural setting, this property combines comfortable living with plenty of outdoor space and practical amenities. An inviting layout provides a comfortable foundation for making the space your own. The main level features a convenient bedroom suite, making everyday living easy and accessible. The home also offers a partial basement for additional storage or flexible use. Step outside and enjoy the landscaped grounds, open back deck, and gazebo—perfect for relaxing, entertaining, or simply taking in the surrounding countryside. A detached 2-car garage provides excellent parking and storage, while a whole-house generator offers valuable peace of mind. Numerous improvements have been completed within the last couple of years, adding to the home's appeal and making it an excellent opportunity for its next owner. This property offers a wonderful combination of acreage, recent improvements, and desirable outdoor amenities, making it a great opportunity for those seeking comfort, privacy, and versatility in a peaceful rural setting!

Agent Remarks Live & Online Auction: Saturday, October 31 at 10 am Open House: Monday, October 26 from 5:30-6 pm A 4% buyer's premium will be added to the winning invoice. Full terms available in DOCS. RE BROKERS: Must register clients 24 hours in advance of auction & be present with them at any & all showings they attend. Client Registration form available on the bidding site.

Sec **Lot** **Lot Ac/SF/Dim** 1.0000 / 43,560 / 101x415 **Lot Desc** Level, 0-2.9999
Above Gd Fin SqFt 1,524 **Above Gd Unfin SqFt** 0 **Below Gd Fin SqFt** 0 **Ttl Below Gd SqFt** 936 **Ttl Fin SqFt** 1,524 **Year Built** 1963
Age 63 **New Const** No **Date Complete** **Ext** Vinyl **Bsmt** Crawl, Slab, Partial Basement **# Rooms** 10
Basement Material Poured Concrete

Room Dimensions					Baths	Full	Half	Water	Well				
	RM	DIM		LVL	B-Main	2	0	Well	Private				
L	23	x	11	M	B-Upper	0	0	Sewer	Septic				
D	11	x	11	M	B-Blw G	0	0	Fuel /	Gas, Forced Air				
F	16	x	11	M	Laundry Rm	Main		Heating					
K	13	x	11	M	Laundry L/W	6	x 8	Cooling	Central Air				
B		x			AMENITIES	Cable Available, Countertops-Laminate, Deck Open, Detector-Smoke, Dryer Hook Up Gas/Elec, Garage Door Opener, Generator-Whole House, Landscaped, Main Level Bedroom Suite,								
D		x											
1B	14	x	13	M									
2B	12	x	12	M									
3B		x			Garage	2.0	/ Detached	/ 36	x 24	/ 864.			
4B		x			Outbuilding	Shed	24	x 11					
5B		x			Outbuilding 2			x					
R		x			Assn Dues		Frequency	Not Applicable					
LF		x			Other Fees								
E		x			Restrictions								

Dryer Hookup Gas	No	Fireplace	No	Water Soft-Owned	No	Skylight	No
Dryer Hookup Elec	No	Guest Qtrs	No	Water Soft-Rented	No	ADA Features	No
Dryer Hookup G/E	Yes	Split Flrpln	No	Alarm Sys-Sec	No	Fence	
Disposal	No	Ceiling Fan	No	Alarm Sys-Rent	No	Golf Course	No
				Garden Tub	No	Nr Wlkg Trails	No
				Jet Tub	No	Garage Y/N	Yes
				Pool	No	Off Street Pk	Yes
				Pool Type			

SALE INCLUDES Dishwasher, Refrigerator, Window Treatments, Range-Gas, Water Heater Gas, Gazebo
FIREPLACE None

Water Access **Wtr** **Water** **Channel**
Water None **Water** **Lake**
Auctioneer Name Chad Metzger and John Burnau **Lic #** AC31300015 **Auction Date** 10/5/2026 **Time** 10 am **Location** Live: 2464 E 225 S,
Financing **Existing** **Propose** **Excluded Party** None
Annual $1,332.20 **Exemption** Homestead, Supplemental **Year Taxes** 2026 **Assessed Value**
Possession Closing
List Office Metzger Property Services, LLC - Off: 260-982-0238 **List Agent** Chad Metzger - Cell: 260-982-9050
Agent E-mail chad@metzgerauction.com **List Agent - User Code** UP388053395 **List Team**
Co-List Office **Co-List Agent**
Showing Instr Showingtime or Open House
List Date 10/5/2026 **Start Showing Date** **Exp Date** 12/31/202 **Owner/Seller a Real Estate Licensee** No **Agent/Owner Related** No
Seller Concessions Offer Y/N No **Seller Concession Amount $** **Special List Cond.** None
Contract Exclusive Right to Sell **Seller's Disclosure Form** Yes **Form Exception**
Virtual **Lockbox Type** Mechanical/Combo **Lockbox Location** Front Door **Type of Sale**
Offer Accepted **Closing Date** **Selling Price** **How Sold**
Ttl Concessions Paid **Sold/Concession** **Conc Paid**
Sell Office **Sell Agent**
Co-Sell Office **Co-Sell** **Sell Team**
Presented Tiffany Reimer - Cell: 260-571-7910 / Metzger Property Services, LLC - Off: 260-982-0238

Information is deemed reliable but not guaranteed. Properties may not be listed by the Agent/Office presenting this report. Report may not contain all available data.
Broker Commissions are not set by law and are fully negotiable. © 2026 IRMLS. All Rights Reserved.

Beacon™ Kosciusko County, IN

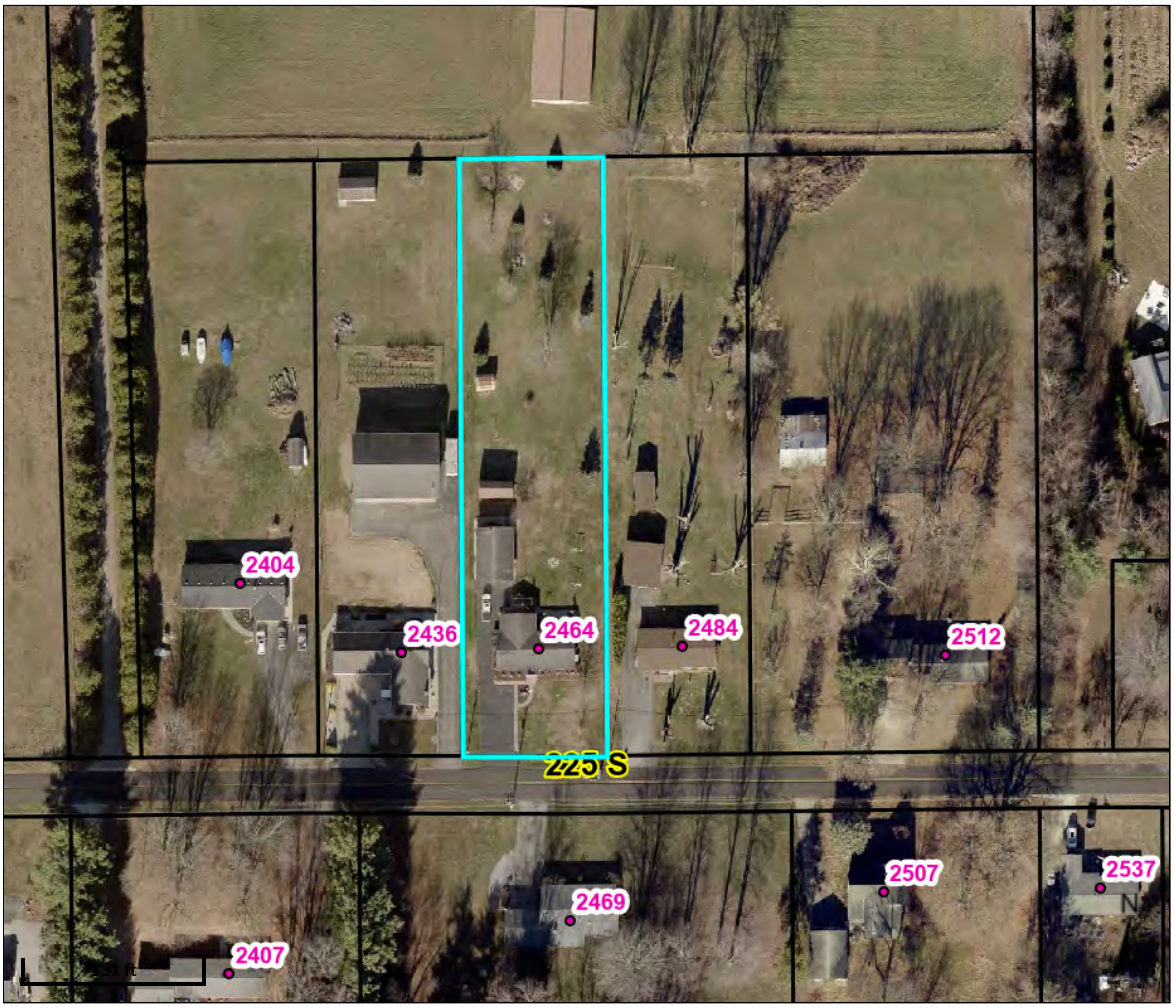

Overview



Legend

- Lot Lines
- Parcels
- Lakes
- Cities and Towns
- House Numbers
- State Roads and US Highways
- Road Centerlines

Parcel ID	003-126-003	**Alternate ID**	003-708000-80
Sec/Twp/Rng	0026-0032-6	**Class**	RESIDENTIAL ONE FAMILY DWELLING ON UNPLATTED LAND OF 0-9.99 ACRES
Property Address	2464 E 225 S WARSAW	**Acreage**	1.0
District	Wayne		
Brief Tax Description	003-126-003 PT NE NW 26-32-6 1.00A (Note: Not to be used on legal documents)		

Owner Address	Marshall Carl J & Sharon R Haines-Marshall 2464 E 225 S Warsaw, IN 46580

Date created: 9/16/2026
Last Data Uploaded: 9/16/2026 8:48:56 AM

Developed by SCHNEIDER GEOSPATIAL

SELLER'S RESIDENTIAL REAL ESTATE SALES DISCLOSURE

State Form 46234 (R8 / 8-25)

Date (month, day, year): 9/12/2026

Property address (number and street, city, state, and ZIP code): 2464 E 225 S WARSAW IN 46580 IN 46580

Seller states that the information contained in this Disclosure is correct to the best of Seller's **CURRENT ACTUAL KNOWLEDGE** as of the above date. The prospective buyer and the owner may wish to obtain professional advice or inspections of the property and provide for appropriate provisions in a contract between them concerning any advice, inspections, defects, or warranties obtained on the property. The following information is not the representations of the real estate broker, if any. The form applies to residential real estate and purchases. Also, Indiana law (IC 32-21-5) generally requires sellers of 1–4-unit residential property to complete this form regarding the known physical condition of the property. IC 32-21-5-1(b) states that this form is **not** required for:

IC 32-21-5-1(b) states that this form is not required for:

1. Transfers ordered by a court, including transfers:
   - A. in the administration of an estate;
   - B. by foreclosure sale;
   - C. by a trustee in bankruptcy;
   - D. by eminent domain;
   - E. from a decree of specific performance;
   - F. from a decree of divorce; or
   - G. from a property settlement agreement.
2. Transfers by a mortgagee who has acquired the real estate at a sale conducted under a foreclosure decree or who has acquired the real estate by a deed in lieu of foreclosure.
3. Transfers by a fiduciary in the course of the administration of the decedent's estate, guardianship, conservatorship, or trust.
4. Transfers made from at least one (1) co-owner solely to at least one (1) other co-owner.
5. Transfers made solely to any combination of a spouse or an individual in the lineal line of consanguinity of at least one (1) of the transferors.
6. Transfers made because of the record owner's failure to pay any federal, state, or local taxes.
7. Transfers to or from any governmental entity.
8. Transfers involving the first sale of a dwelling that has not been inhabited.
9. Transfers to a living trust.

Purpose of Disclosure Form: Completion of this form shall satisfy the requirements of IC 32-21-5-7 that mandates the seller's disclosure of conditions relevant to the listed property. This disclosure is based on the Seller's current knowledge of the property's conditions and the improvements thereon, however that knowledge was gained. This disclosure form shall not be a warranty by the Seller and shall not be used as a substitute for an inspection or warranty that the purchaser may wish to obtain. This form is a statement of the conditions and other information about the property known by the Seller. The representations in this form are the representations of the owner and are not the representations of the agent, if any. This information is for disclosure only and is not intended to be part of any contract between the Buyer and the Seller. The Seller must complete and sign the disclosure form and submit the form to a prospective buyer before an offer is accepted for the sale of the property. The Buyer is encouraged to obtain his or her own professional inspections of this property. A Buyer may not invalidate a real estate transaction or a contract to purchase real estate due to the Buyer's failure to sign a Seller's disclosure form that has been received or acknowledged by the Buyer.

Instructions to the Seller(s): (1) Answer every question truthfully. (2) Report all known conditions affecting the property, regardless of how you know about them or when you learned. (3) Attach additional pages, if necessary, with your signature and the date and time of signing. (4) Complete this form yourself. (5) If an item does not apply to your property or is rented, mark "not applicable/rented." (6) If you truthfully do not know the answer to a question, mark "unknown." (7) If you learn any fact prior to closing that changes one or more of your answers to this form after you have completed and submitted it, immediately notify any potential buyer of the change in writing.

NOTE: "Defect" means a condition that would have a significant adverse effect on the value of the property, that would significantly impair the health or safety of future occupants of the property, or that if not repaired, removed or replaced would significantly shorten or adversely affect the expected normal life of the premises.

The information contained in this Disclosure has been furnished by the Seller, who certifies to the truth thereof, based on the Seller's CURRENT ACTUAL KNOWLEDGE. A disclosure form is not a warranty by the owner or the owner's broker, if any, and the disclosure form may not be used as a substitute for any inspections or warranties that the prospective buyer or owner may later obtain. At or before settlement, the owner is required to disclose any material change in the physical condition of the property or certify to the purchaser at settlement that the condition of the property is substantially the same as it was when the disclosure form was provided. Seller and Purchaser hereby acknowledge receipt of this Disclosure by signing below.

Signature of Seller	Date (*mm / dd / yyyy*)	Signature of Buyer	Date (*mm / dd / yyyy*)
Carl Marshall	9/13/26		
Signature of Seller	Date (*mm / dd / yyyy*)	Signature of Buyer	Date (*mm / dd / yyyy*)
Sharon R. Haines-Marshall	9/13/26		

The Seller hereby certifies that the condition of the property is substantially the same as it was when the Seller's Disclosure form was originally provided to the Buyer.

Signature of Seller (*at closing*)	Date (*mm / dd / yyyy*)	Signature of Seller (*at closing*)	Date (*mm / dd / yyyy*)

Property address (number and street, city, state, and ZIP code)
2464 E 225 S Warsaw, IN 46580

1. The following are in the conditions indicated:

A. APPLIANCES	Not Applicable / Rented	Defective	Not Defective	Unknown
Built-in Vacuum System	✓			
Clothes Dryer	✓			
Clothes Washer	✓			
Dishwasher			✓	
Disposal	✓			
Freezer			✓	
Gas Grill	✓			
Hood			✓	
Microwave Oven			✓	
Oven			✓	
Range			✓	
Refrigerator			✓	
Room Air Conditioner(s)	✓			
Trash Compactor	✓			
TV Antenna / Dish	✓			
Other:				

B. ELECTRICAL SYSTEM	Not Applicable / Rented	Defective	Not Defective	Unknown
Security Systems(s)	✓			
Ceiling Fan(s)			✓	
Garage Door Opener / Controls			✓	
Inside Telephone Wiring and Blocks / Jacks	✓			
Light Fixtures			✓	
Sauna	✓			
Smoke / Fire Alarms			✓	
Carbon Monoxide Detectors	✓		✓	
Switches and Outlets			✓	
Vent Fan(s)			✓	
☐ 60 ☐ 100 ☑ 200 Amp Service			✓	
Generator			✓	

C. WATER & SEWER SYSTEM	Not Applicable / Rented	Defective	Not Defective	Unknown
Cistern	✓			
Septic Field / Bed			✓	
Septic & Holding Tank / Septic Mound			✓	
Hot Tub	✓			
Plumbing			✓	
Aerator System	✓			
Sump Pump			✓	
Irrigation Systems	✓			
Water Heater / Electric	✓			
Water Heater / Gas			✓	
Water Heater / Solar	✓			
Water Purifier	✓			
Water Softener			✓	
Well			✓	
Geothermal and Heat Pump	✓			
Other Sewer System *(Explain)*	✓			
Swimming Pool & Pool Equipment	✓			

	Yes	No	Unknown
Are the structures connected to a public water system?		✓	
Are the structures connected to a public sewer system?		✓	
Are there any additions that may require improvements to the sewage disposal system?		✓	
If yes, have the improvements been completed on the sewage disposal system?	✓		
Are the structure(s) connected to a private / community water system?		✓	
Are the structure(s) connected to a private / community sewer system?		✓	

The information contained in this Disclosure has been furnished by the Seller, who certifies to the truth thereof, based on the Seller's CURRENT ACTUAL KNOWLEDGE. A disclosure form is not a warranty by the owner or the owner's broker, if any, and the disclosure form may not be used as a substitute for any inspections or warranties that the prospective buyer or owner may later obtain. At or before settlement, the owner is required to disclose any material change in the physical condition of the property or certify to the purchaser at settlement that the condition of the property is substantially the same as it was when the disclosure form was provided. Seller and Purchaser hereby acknowledge receipt of this Disclosure by signing below.

Signature of Seller	Date (*mm / dd / yyyy*)	Signature of Buyer	Date (*mm / dd / yyyy*)
Carl Marshall	9/13/26		
Signature of Seller	Date (*mm / dd / yyyy*)	Signature of Buyer	Date (*mm / dd / yyyy*)
Sharon R. Haines-Marshall	9/13/26		

The Seller hereby certifies that the condition of the property is substantially the same as it was when the Seller's Disclosure form was originally provided to the Buyer.

Signature of Seller (*at closing*)	Date (*mm / dd / yyyy*)	Signature of Seller (*at closing*)	Date (*mm / dd / yyyy*)

Property address (number and street, city, state, and ZIP code)
2464 E225 S Warsaw, IN 46580

D. HEATING & COOLING SYSTEM	Not Applicable / Rented	Defective	Not Defective	Unknown
Attic Fan	✓			
Boiler / Radiator	✓			
Central Air Conditioning			✓	
Electric Heat Pump	✓			
Furnace Heat / Gas			✓	
Furnace Heat / Electric	✓			
Geothermal	✓			
Solar House-Heating	✓			
Woodburning Stove	✓			
Fireplace	✓			
Fireplace Insert	✓			
Air Cleaner			✓	
Humidifier	✓			
Propane Tank	✓			
Other Heating Source	✓			

2. ROOF	Yes	No	Unknown
Age, if known: 20 Years.			
Does the roof leak?		✓	
Is there present damage to the roof?		✓	
Is there more than one layer of shingles on the house?		✓	
If yes, how many layers? _____			
3. WATER HEATER	✓		
Age, if known: 12 Years.			
4. FURNACE	✓		
Age, if known: 15 Years.			
5. CENTRAL AIR CONDITIONING	✓		
Age, if known: 15 Years.			

6. HAZARDOUS CONDITIONS	Yes	No	Unknown
Have there been or are there any hazardous conditions on the property, such as methane gas, lead paint, radon gas in house or well, radioactive material, landfill, mineshaft, expansive soil, toxic materials, mold, other biological contaminants, asbestos insulation, or PCB's?		✓	
Is there contamination caused by the manufacture of a controlled substance on the property that has not been certified as decontaminated by an inspector approved under IC 15-19-3.1?		✓	
Has there been manufacture of methamphetamine or dumping of waste from the manufacture of methamphetamine in a residential structure on the property?		✓	

Explain:

The information contained in this Disclosure has been furnished by the Seller, who certifies to the truth thereof, based on the Seller's CURRENT ACTUAL KNOWLEDGE. A disclosure form is not a warranty by the owner or the owner's broker, if any, and the disclosure form may not be used as a substitute for any inspections or warranties that the prospective buyer or owner may later obtain. At or before settlement, the owner is required to disclose any material change in the physical condition of the property or certify to the purchaser at settlement that the condition of the property is substantially the same as it was when the disclosure form was provided. Seller and Purchaser hereby acknowledge receipt of this Disclosure by signing below.

Signature of Seller	Date (mm / dd / yyyy)	Signature of Buyer	Date (mm / dd / yyyy)
Carl Marshall	9/13/26		
Signature of Seller	Date (mm / dd / yyyy)	Signature of Buyer	Date (mm / dd / yyyy)
Sharon R Haines-Marshall	9/13/26		

The Seller hereby certifies that the condition of the property is substantially the same as it was when the Seller's Disclosure form was originally provided to the Buyer.

Property address (number and street, city, state, and ZIP code)
2464 E 225 S Warsaw, IN 46580

7. OTHER DISCLOSURES	Yes	No	Unknown
Do structures have aluminum wiring?		✓	
Are there any foundation problems with the structures?		✓	
Are there any encroachments?		✓	
Are there any violations of zoning, building codes, or restrictive covenants?		✓	
Does the property have a shared driveway with another property?		✓	
Is the property subject to covenants, conditions and / or restrictions of a homeowner's association?		✓	
Is the property subject to a homeowner's association assessment? If yes, what is the current amount? _____		✓	
Is this property located within a locally designated historic district under IC 36-7-11?		✓	
Is the present use a non-conforming use? Explain:		✓	
Is the access to your property via a private road?		✓	
Is the access to your property via a public road?	✓		
Is the access to your property via an easement?		✓	
Have you received any notices by any governmental or quasi-governmental agencies affecting this property?		✓	
Are there any structural problems with the building?		✓	
Have any substantial additions or alterations been made without a required building permit?		✓	
Are there moisture and/or water problems in the basement, crawl space area, or any other area?		✓	
Is there any damage due to wind, flood, termites or rodents?		✓	
Have any structures been treated for wood destroying insects?		✓	
Is the property or a portion of the property located within a community's flood plain boundaries, as indicated in a Federal Emergency Management Agency Flood Insurance Rate Map? See https://msc.fema.gov/portal/home.		✓	
Do you currently pay flood insurance?		✓	
Is the property located near a military installation, within a state area of interest ((as defined in IC 36-7-30.2-6) and may be impacted to some degree by the effects of the installation's military operations? If yes, local laws may restrict use and development of the property to promote compatibility with military installation operation.		✓	
Does the property contain underground storage tank(s)?		✓	
Is the homeowner a licensed real estate broker?		✓	
Is there any threatened or existing litigation regarding the property?		✓	
Is the Owner subject to the Foreign Investment in Real Property Tax Act? See http://www.irs.gov/publications/p515/index.html.		✓	
Is the property located within one (1) mile of an airport?		✓	
Is the property subject to a conservation easement as defined in IC 32-23-5-2?		✓	

8. ADDITIONAL COMMENTS AND/OR EXPLANATIONS:
(*Use additional pages and attach, if necessary*)

The information contained in this Disclosure has been furnished by the Seller, who certifies to the truth thereof, based on the Seller's CURRENT ACTUAL KNOWLEDGE. A disclosure form is not a warranty by the owner or the owner's broker, if any, and the disclosure form may not be used as a substitute for any inspections or warranties that the prospective buyer or owner may later obtain. At or before settlement, the owner is required to disclose any material change in the physical condition of the property or certify to the purchaser at settlement that the condition of the property is substantially the same as it was when the disclosure form was provided. Seller and Purchaser hereby acknowledge receipt of this Disclosure by signing below.

Signature of Seller	Date (*mm / dd / yyyy*)	Signature of Buyer	Date (*mm / dd / yyyy*)
Carl Marshall	6/13/26		
Signature of Seller	Date (*mm / dd / yyyy*)	Signature of Buyer	Date (*mm / dd / yyyy*)
Sharon R. Haines Marshall	6/13/26		

The Seller hereby certifies that the condition of the property is substantially the same as it was when the Seller's Disclosure form was originally provided to the Buyer.

Signature of Seller (*at closing*)	Date (*mm / dd / yyyy*)	Signature of Seller (*at closing*)	Date (*mm / dd / yyyy*)



Average Utilities

Utility	Company	Average Amount
Gas	NIPSCO	$ 99.00 budget
Electric	Kema	$ 117.00
Water	Well	$
Septic/Sewer	Septic	$
HOA	N/A	$
Other		$

Additional Notes

Home has whole house generator Nat. gas

New windows 4 yrs

Siding 4 yrs

Gutters 4 yrs.

Everdry with new home owner warranty

General Information

Parcel Number
43-11-26-400-290.000-031

Local Parcel Number
0370800080

Tax ID:

Routing Number
003-126-003

Property Class 511
1 Family Dwell - Unplatted (0 to 9.9

Year: 2026

Location Information

County
Kosciusko

Township
WAYNE

District 031 (Local 031)
WAYNE TOWNSHIP

School Corp 4415
WARSAW COMMUNITY

Neighborhood 308853-031
WAYNE TWP ACREAGE - RES

Section/Plat
26-32-6

Location Address (1)
2464 E 225 S
WARSAW, IN 46580

Zoning
AG AGRICULTURE

Subdivision

Lot

Market Model
N/A

Characteristics

Topography
Level

Flood Hazard ☐

Public Utilities
Gas, Electricity

ERA ☐

Streets or Roads
Paved

TIF ☐

Neighborhood Life Cycle Stage
Other

Printed Saturday, March 21, 2026

Review Group 2024

Ownership

MARSHALL CARL J & SHARON R HAI
2464 E 225 S
WARSAW, IN 46580

Legal

3-126-3
PT NE NW 26-32-6 1A

Transfer of Ownership

Date	Owner	Doc ID	Code	Book/Page	Adj Sale Price	V/I
06/29/2018	MARSHALL CARL J &	2018061379	QC	/		I
06/05/2018	MARSHALL CARL J	2018060181	WD	/	$132,000	I
12/18/2015	HAINES-MARSHALL	2015120738	TD	/		I
09/27/2007	HAINES SHARON R R		WD	/		I
01/12/2007	HAINES SHARON R		WD	/		I
01/01/1900	HAINES RICHARD L (		WD	/		I

Res

Valuation Records

Assessment Year	2026	2025	2024	2023	2022
Reason For Change	AA	AA	AA	AA	AA
As Of Date	01/01/2026	01/01/2025	01/01/2024	01/01/2023	01/01/2022
Valuation Method	Indiana Cost Mod	Indiana Cost Mod	Indiana Cost Mod	Indiana Cost Mod	Indiana Cost Mod
Equalization Factor	1.0000	1.0000	1.0000	1.0000	1.0000
Notice Required	☐	☐	☐	☐	☐
Land	**$30,000**	**$30,000**	**$22,000**	**$22,000**	**$22,000**
Land Res (1)	$30,000	$30,000	$22,000	$22,000	$22,000
Land Non Res (2)	$0	$0	$0	$0	$0
Land Non Res (3)	$0	$0	$0	$0	$0
Improvement	**$181,300**	**$176,700**	**$163,600**	**$151,300**	**$137,700**
Imp Res (1)	$181,300	$176,700	$163,600	$144,000	$131,000
Imp Non Res (2)	$0	$0	$0	$0	$0
Imp Non Res (3)	$0	$0	$0	$7,300	$6,700
Total	**$211,300**	**$206,700**	**$185,600**	**$173,300**	**$159,700**
Total Res (1)	$211,300	$206,700	$185,600	$166,000	$153,000
Total Non Res (2)	$0	$0	$0	$0	$0
Total Non Res (3)	$0	$0	$0	$7,300	$6,700

Land Data (Standard Depth: Res 120', CI 120' Base Lot: Res 0' X 0', CI 0' X 0')

Land Type	Pricing Method	Soil ID	Act Front.	Size	Factor	Rate	Adj. Rate	Ext. Value	Infl. %	Market Factor	Cap 1	Cap 2	Cap 3	Value
9	A		0	1.0000	1.00	$30,000	$30,000	$30,000	0%	1.0000	100.00	0.00	0.00	$30,000

Data Source N/A **Collector** **Appraiser**

Notes

9/30/2025 BP: 2026 BP#2025-1094 UTL SHED $7,000 8/29/25

8/5/2019 REA: 2020 CHANGED EFYR ON HOME TO 1975, GRADE ON DET GAR TO D+2, ADDED WDDK IN WITH THE HOUSE PER PICTOMETRY....

REMODELED IN 2018, NEW WINDOWS & SIDING ALSO. REMOVED HALF BATH & ADDED A 2ND FULL BATH PER QUESTIONNAIRE. SB

2/7/2017 BP: 2017 BP #160192 DECK $300 4/11/16

2/7/2017 2017: ADDED 10X12 WDDK COMPLETE FOR 12/31/16 PER FIELD CHECK 1/16/17

1/29/2016 2016: REMOVED 8X12 WDDK & ADDED (2) UTILITY SHEDS PER FIELD CHECK 10/12/15

6/24/2015 2016: MOVED TO WAYNE TWP ACREAGE NEIGHBORHOOD (308853) DELETED OLD NEIGHBORHOOD

2/24/2009 BP: #01-0461 5/08/01 RESIDENCE ADD 5000
BP #150304 STORAGE SHED $5,200 5/15/15
BP #150253 SHED $1,000 4/30/15

Land Computations

Calculated Acreage	1.00
Actual Frontage	0
Developer Discount	☐
Parcel Acreage	1.00
81 Legal Drain NV	0.00
82 Public Roads NV	0.00
83 UT Towers NV	0.00
84 Solar Energy Land	0.00
9 Homesite	1.00
91/92 Acres	0.00
Total Acres Farmland	0.00
Farmland Value	$0
Measured Acreage	0.00
Avg Farmland Value/Acre	0.0
Value of Farmland	$0
Classified Total	$0
Farm / Classifed Value	$0
Homesite(s) Value	$30,000
91/92 Value	$0
Supp. Page Land Value	
CAP 1 Value	$30,000
CAP 2 Value	$0
CAP 3 Value	$0
Total Value	**$30,000**

General Information

Occupancy	Single-Family
Description	Single-Family
Story Height	1
Style	40 newer 1 st 1961-20
Finished Area	1524 sqft
Make	

Floor Finish

- ☐ Earth
- ☑ Tile
- ☑ Slab
- ☑ Carpet
- ☑ Sub & Joist
- ☐ Unfinished
- ☐ Wood
- ☐ Other
- ☐ Parquet

Wall Finish

- ☑ Plaster/Drywall
- ☑ Unfinished
- ☐ Paneling
- ☐ Other
- ☐ Fiberboard

Plumbing

	#	TF
Full Bath	2	6
Half Bath	0	0
Kitchen Sinks	1	1
Water Heaters	1	1
Add Fixtures	0	0
Total	4	8

Accommodations

Bedrooms	2
Living Rooms	0
Dining Rooms	1
Family Rooms	1
Total Rooms	10

Heat Type

Central Warm Air

Roofing

- ☐ Built-Up
- ☐ Metal
- ☑ Asphalt
- ☐ Slate
- ☐ Tile
- ☐ Wood Shingle
- ☐ Other

Exterior Features

Description	Area	Value
Porch, Open Frame	32	$2,600
Wood Deck	168	$3,600

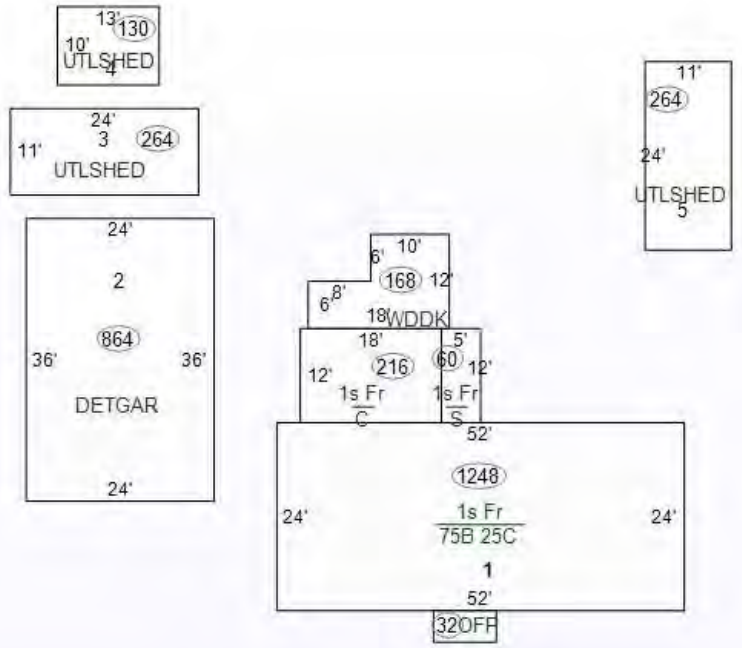

Specialty Plumbing

Description	Count	Value
Sauna Bath (2)	1	$9,000

Cost Ladder

Floor	Constr	Base	Finish	Value	Totals
1	1Fr	1524	1524	$171,600	
2					
3					
4					
1/4					
1/2					
3/4					
Attic					
Bsmt		936	0	$51,900	
Crawl		528	0	$5,300	
Slab		60	0	$0	
				Total Base	$228,800
Adjustments				**1 Row Type Adj. x 1.00**	$228,800
Unfin Int (-)					$0
Ex Liv Units (+)					$0
Rec Room (+)					$0
Loft (+)					$0
Fireplace (+)					$0
No Heating (-)					$0
A/C (+)				1:1524	$4,600
No Elec (-)					$0
Plumbing (+ / -)				8 – 5 = 3 x $1,400	$4,200
Spec Plumb (+)					$9,000
Elevator (+)					$0
				Sub-Total, One Unit	$246,600
				Sub-Total, 1 Units	
Exterior Features (+)				$6,200	$252,800
Garages (+) 0 sqft				$0	$252,800
				Quality and Design Factor (Grade)	0.90
				Location Multiplier	0.92
				Replacement Cost	$209,318

Summary of Improvements

Description	Story Height	Constr Type	Grade	Year Built	Eff Year	Eff Age	Co nd	Base Rate	LCM	Adj Rate	Size	RCN	Norm Dep	Remain. Value	Abn Obs	PC	Nbhd	Mrkt	Cap 1	Cap 2	Cap 3	Improv Value
1: Single-Family	1	Wood Fr	D+2	1963	1975	51	A		0.92		2,460 sqft	$209,318	45%	$115,130	0%	100%	1.250	1.000	100.00	0.00	0.00	$143,900
2: Detached Garage	1	Wood Fr	D+2	1976	1976	50	A	$42.05	0.92	$34.82	24'x36'	$30,082	40%	$18,050	0%	100%	1.250	1.000	100.00	0.00	0.00	$22,600
3: Utility Shed	1		C	2015	2015	11	A	$24.58	0.92	$22.61	11'x24'	$5,970	35%	$3,880	0%	100%	1.250	1.000	100.00	0.00	0.00	$4,900
4: Utility Shed	1		C	2015	2015	11	A	$28.66	0.92	$26.37	10'x13'	$3,428	35%	$2,230	0%	100%	1.250	1.000	100.00	0.00	0.00	$2,800
5: Utility Shed 02	1		C	2025	2025	1	A	$24.58	0.92	$22.61	11'x24'	$5,970	5%	$5,670	0%	100%	1.250	1.000	100.00	0.00	0.00	$7,100

METZGER ONLINE BIDDING INSTRUCTIONS

Create an Account:

- Go to bidmetzger.com - *This will take you to all Metzger Online Auctions that are open for bidding*
- Click on Login/Register at the top of the page
    - Click the green "Register" button
    - Choose username
    - Enter your password
    - Fill in your Name, Email, Phone Number, Address, City, State, and Zip Code
    - Click on Next Step
    - Click the empty box to Agree to the Auction Terms and Conditions
    - Click "Submit"

You are now ready to choose the Auction you want to bid in!

To be approved to bid in a specific auction, follow these easy steps:

- Click "Enter Auction" on the Auction you want to bid in
- Then Click the green "Register for Auction" button
- This will ask you to enter a payment method. You **MUST** enter a debit/charge card in order to bid.
    - **This card will be charged $1.00 to make sure it is a valid card; this fee will fall off your account after a couple days.**
    - **We WILL NOT charge your card if you are the winning bidder**
    - **IF YOU ARE THE WINNING BIDDER YOU MUST CALL THE OFFICE IMMEDIATELY: 260.982.0238 TO ARRANGE SIGNING PURCHASE DOCS & SUBMITTING EARNEST MONEY**
- Click the blue "Agree to Terms and Add Credit Card" button

You are now ready to Bid in that specific auction!

If You Are the Winning Bidder You Must Call The Office Immediately: 260.982.0238 To Arrange Signing Purchase Docs & Submitting Earnest Money

If you are dormant, the site will log you out for your protection. If this happens, Click on Login/Register at the top of the page, enter your email and password and click the green "Login" button and enter your information.

Happy Bidding!

Please let us know if you have any questions that we can help with 260.982.0238 or info@metzgerauction.com

...Generation after Generation

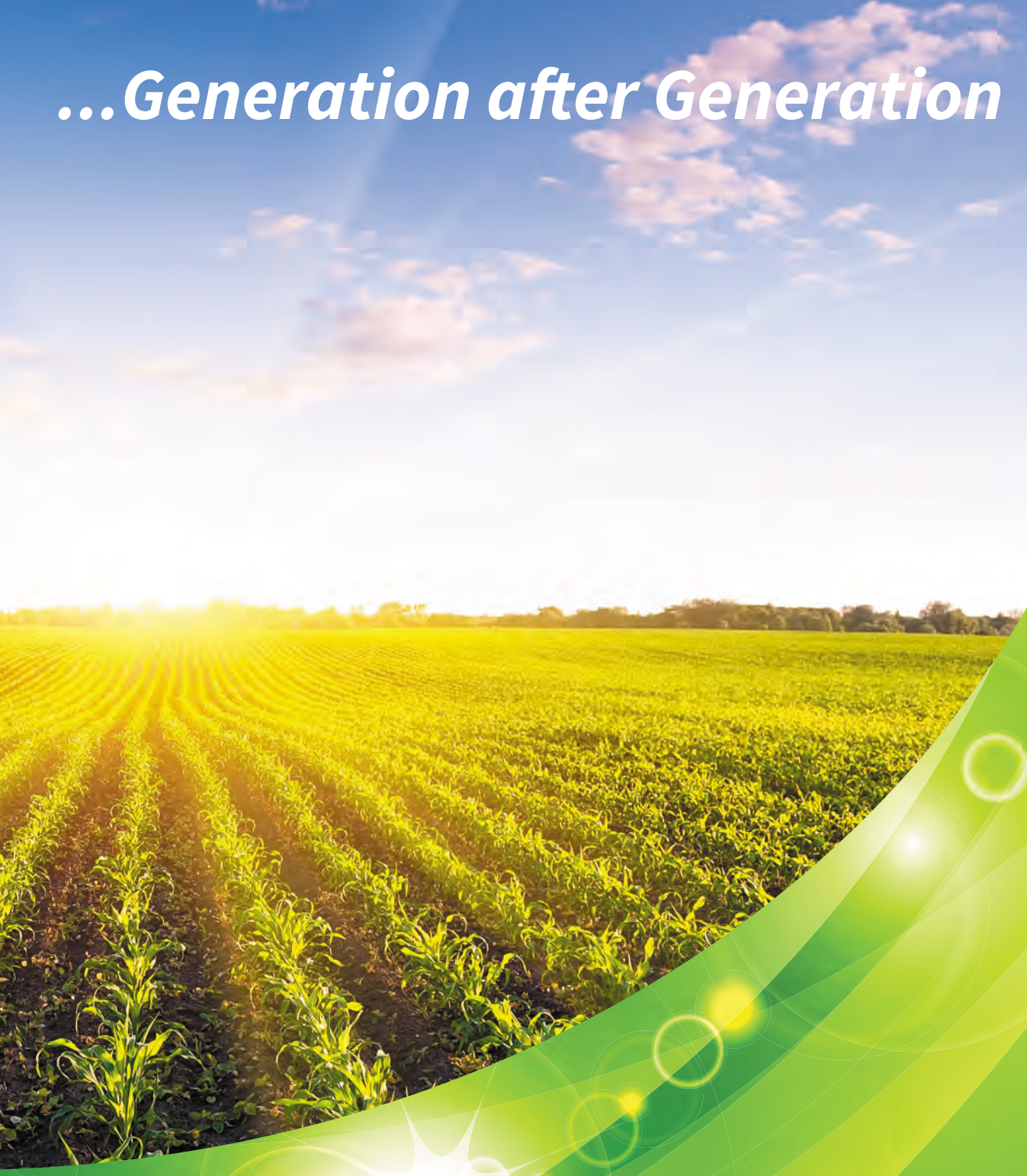

Metzger
Property Services, LLC

Farm Sales • Real Estate • Auctions • Appraisals

260-982-0238

www.MetzgerAuction.com